PipeHugger with Flange Face "FF" or Thread "TD"

Typical "level 1" Drawing, no extra charge. Under license from M. Packer since 1963

Single Connection "PHrFF/" or "PHr-TD/--" threaded

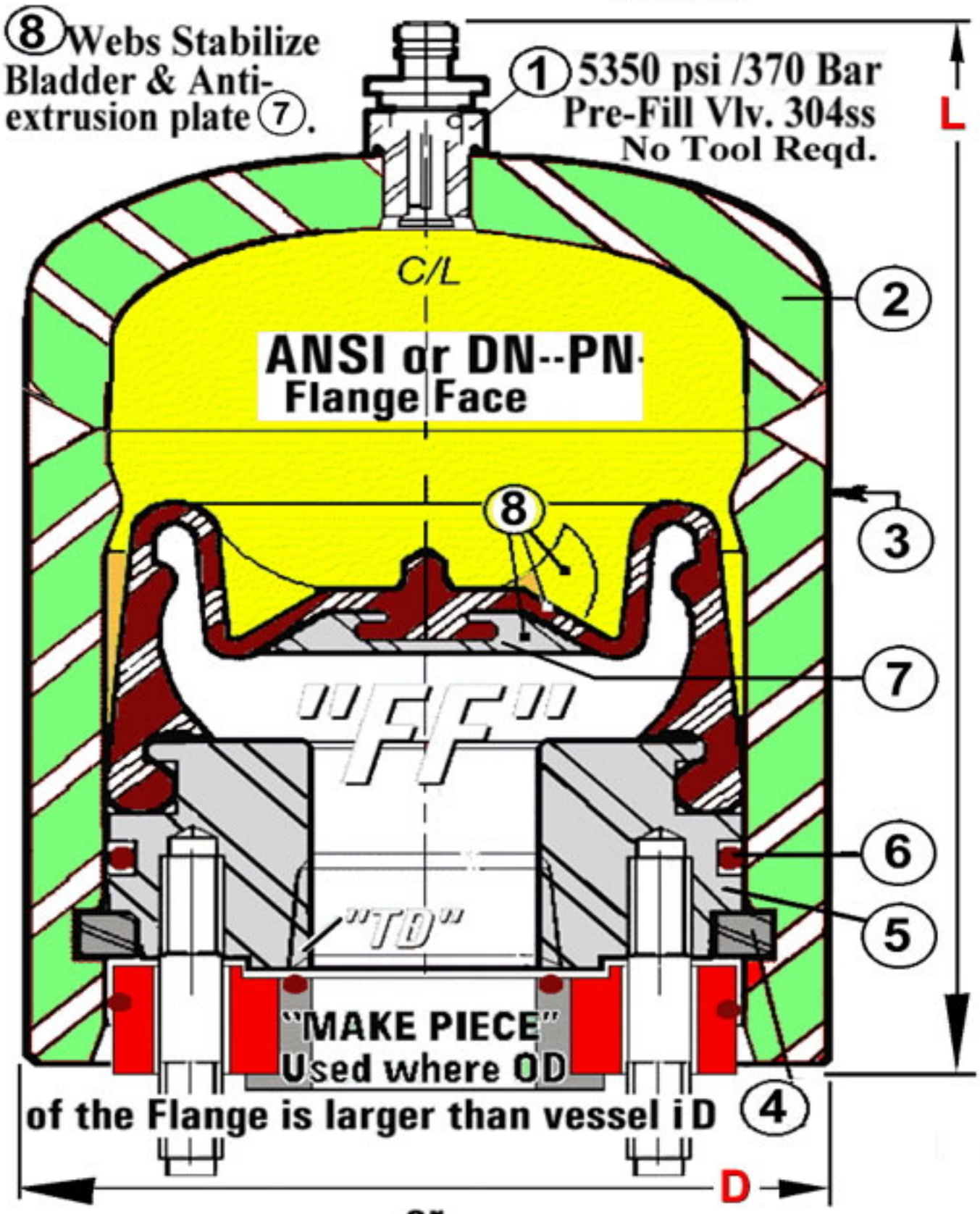

D Outside Diameter	
L Overall Length	
C Connection	

Rule of thumb for failure Control:-
Where T=wall thickness
F, distance in to groove = 1.4T
J, groove width = 0.8T
N, groove depth = 0.45T
Ensures safe depressurization by the vomit of seal 6 down the ajacent seal lead in shamfer 15° when the mouth spreads to to dotted line @ 6Pd.

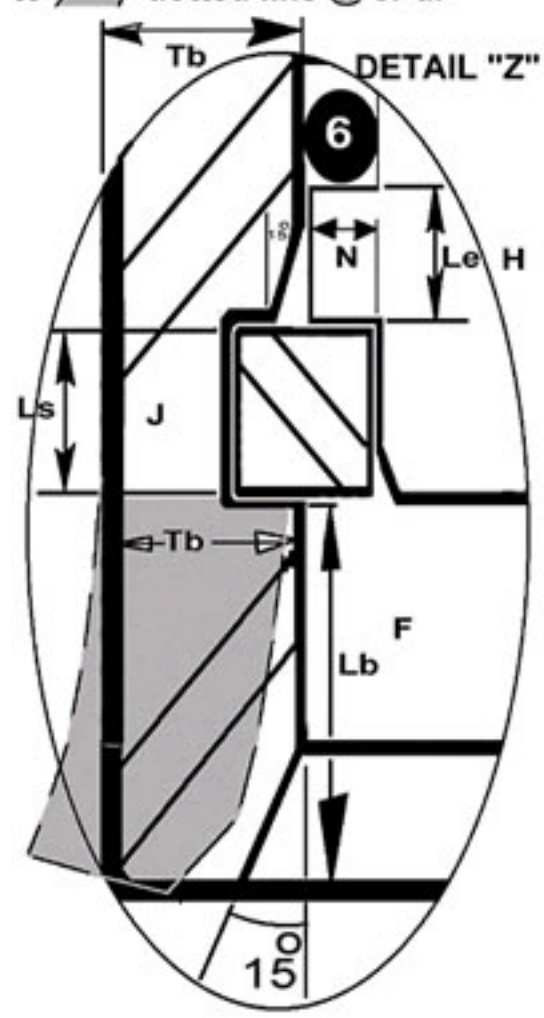

or

"TD" Threaded Connection Female to 1.25" NPT or 1" BSP Male 1.5" NPT up.

Connection Specification
ANSI B16.5
DN-PN

Item	Part No.	Description	Material	I.D. #
1	9019C	N2 Prefill	304ss	
2		Cap-Gas	2:1 S.E. head	
3		Body (Shell)	106 Smls Pipe	
4		Segmental Lock Ring	from 106 Smls Pipe	
5		End-closure	PVQ Plate	
6		Seal		
7		Anti-Ext.Button	"Non Pressure Retaining component"	
8		Diaphragm & Webs	"Non Pressure Retaining component"	

CUSTOMER:
CUSTOMER REF :
QUANTITY:
W/O No :
W: Procedure Nbr.
WEIGHT (EST.):
ISSUED BY:
CHECKED BY:
ISSUE DATE: (DAY/MONTH/YEAR) 10 Jly 1979

PULSEGUARD® Ltd. & Inc
Guard Against Pulsation Licensed M. Packer 1963
ISO 9001 - 95-LON-AQ-458
www.pulseguard.co.uk
PO Box 47 Stockport "LDI" SK5 7BB Ches. UK
Vessel Cert. 29289
www.pulseguard.com
Box 506 Hampstead NC 28443-9110 USA
-01-910-270-2737
Fax. -01-910-270-2740
In association with ShockGuard Ltd & Liquid Dynamics International Ltd
PIPE LINE SHOCK PROTECTION
ANALYSIS DIAGNOSTICS SOFTWARE

TITLE

APPLICATION

FILE REF: PhrFlgd.bmp

SCALE: NTS

ALL DIMENSIONS ARE IN MM EXCEPT AS STATED.

SHEET: 1 OF 1

REV. 0